HR VALVES

PRESSURE SUSTAINING **ELECTROVALVE**

A CAREFUL VALVE DESIGN, THE NATURE OF THE COMPONENTS USED IN THEIR MANUFACTURE PROCESS, ADDED TO OUR STRICT QUALITY CONTROL TECHNIQUES, ALLOWS US TO OFFER A WIDE RANGE OF RELIABLE AND HIGH QUALITY PRODUCTS

Connection type and diameter

- 1 ½" to 3" thread
- 3" to 12" flange

MAIN FEATURES

- High resistance to operation and exposure conditions. Anti-corrosion epoxy-polyester coating.
- Chemical and mechanical resistant diaphragm with low opening pressure.
- Wide regulation range.
- Accurate and stable regulation.
- Low head loss.
- Easy maintenance.
- Bidirectional valve.

APPLICATIONS

- Automation of irrigation systems, industrial processes and hydraulic applications in municipal facilities.
- Controlling the pipe filling time.
- Avoiding flow rates higher than design flow rate.

For filtration equipment applications, please consult technical datasheet “Special Sustaining valve kit for filtration equipment”.

HOW DO THEY WORK

Two-way metallic hydraulic valve, which incorporates a three position selector valve and a three-way pilot, made of technical plastic material, and a NO three-way solenoid valve.

The valve remains closed as long as the solenoid is not energized. When electrically activating the solenoid, it regulates continuously the position of the diaphragm through the water inlet/outlet of the chamber to ensure that the pressure value upstream of the valve does not reach lower values than those regulated in the pilot.

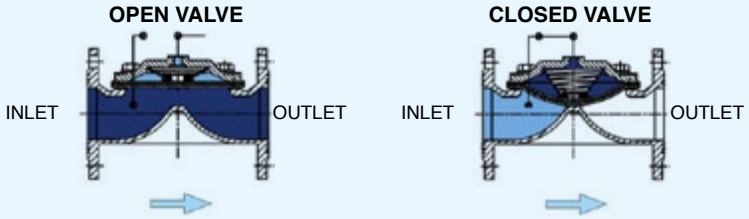

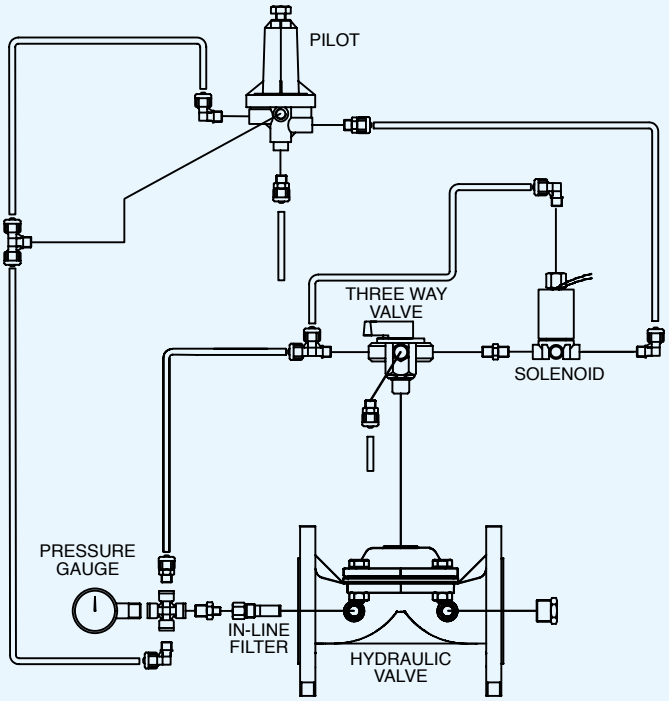

HR VALVES

PRESSURE SUSTAINING **ELECTROVALVE**

HYDRAULIC VALVE TECHNICAL SPECIFICATIONS

Connections	DN (mm)	DN (inch)	L (mm)	H (mm)	Operating flow range (m^3/h)	Max. working pressure (bar)	Min. working pressure (kg/cm^2)	Connection standard*	N° of holes	Weight (kg)
Thread	40	1 ½"	170	65	2 – 33	6	0.5 – 0.8	BSP	-	2.3
						16	1.2 – 1.5			
	50	2"	186	75	2 – 42	6	0.5 – 0.8	BSP	-	3.1
						16	1.2 – 1.5			
	65	2 ½"	205	90	2.5 – 45	6	0.5 – 0.8	BSP	-	4
						16	1.2 – 1.5			
	80C	3" (3-2-3)	210	113	5 – 48	6	0.5 – 0.8	BSP	-	5.3
						16	1.2 – 1.5			
	80A	3"	240	105	5 – 110	6	0.5 – 0.8	BSP	-	7.2
						16	1.2 – 1.5			
Flange	80A	3"	250	203	5 – 110	6	0.5 – 0.8	PN10	8	11.2
						16	1.2 – 1.5	PN16		
	80D	3" (3-4-3)	280	203	5 – 130	6	0.5 – 0.8	PN10	8	13.8
						16	1.2 – 1.5	PN16		
	100	4"	305	223	10 – 150	6	0.5 – 0.8	PN10	8	15.5
						16	1.2 – 1.5	PN16		
	125C	5" (5-4-5)	330	250	10 – 160	6	0.5 – 0.8	PN10	8	21
						16	1.2 – 1.5	PN16		
	150	6"	390	282	15 – 330	6	0.8 – 1	PN10	8	41
						16	1.5 – 1.8	PN16		
	200	8"	475	343	20 – 590	6	0.8 – 1	PN10	8	68
						16	1.5 – 1.8	PN16	12	
	250C	10" (10-8-10)	505	405	20 – 680	6	0.8 – 1	PN10	8	88
						16	1.5 – 1.8	PN16	12	
	300	12"	584	460	25 – 1400	6	1 – 1.2	PN16	12	120
						16	1.5 – 1.8			

*Flange connection Standard DIN 2576 (PN10) compatible with DIN 2502 (PN16) for up to 6" models included.

SUSTAINING ELECTROVALVE COMPONENTS CHARACTERISTICS

Pilot**	Regulation pressure range	(PN6) 0.9 – 5.2 bar
		(PN10) 1.5 – 7.5 bar
Solenoid	Configuration	Normally open (NO)
	Voltage	12 V DC LATCH
		24 V AC
Three-way manual valve		M 1/4" – 3 x F 1/8"

**The valve incorporates a PN6 pilot for maximum working pressure 6 bar models and a PN10 pilot for maximum working pressure 16 bar models.

MATERIALS OF CONSTRUCTION

Body and lid	Thread models	Cast iron (GG25)	Epoxy-polyester coating
	Flange models	Ductile iron (GGG50)	
Diaphragm (membrane)	Rubber reinforced with nylon		
Spring	Stainless steel 302		
Support	Nylon		
Pilot	Fiberglass reinforced technical plastic		
Three-way manual valve	Brass		

HEAD LOSS

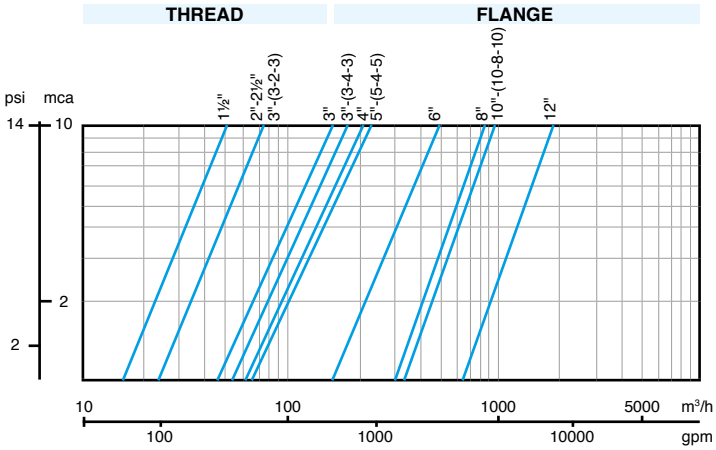

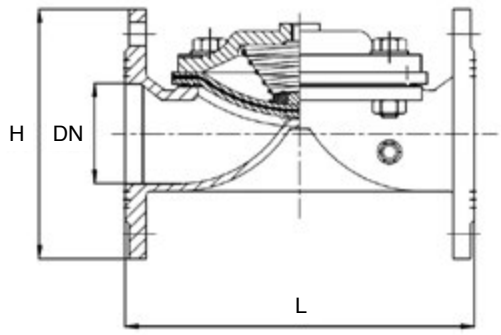

The company reserves the right to change the characteristics of these products without prior notice.